# SUMO-R-5K



Color: Black

Weight: 0.6 lbs

| | |
|---|---|
| **Project:** | **Type:** |
| **Prepared By:** | **Date:** |

### Driver Info

| | |
|---|---|
| Type | Constant Current |
| 120V | 0.09A |
| 208V | N/A |
| 240V | N/A |
| 277V | N/A |
| Input Watts | 10W |

### LED Info

| | |
|---|---|
| Watts | 10W |
| Color Temp | 2700/3000/3500/4000/5000K |
| Color Accuracy | 90 CRI |
| L70 Lifespan | 50,000 Hours |
| Lumens | 830-896 lm |
| Efficacy | 83-90 lm/W |

## Technical Specifications

### Performance

**Product Type:**
Slim Style Edge-Lit Surface mount downlight

**Description:**
5 selectable color temperatures in one surface mount fixture. Contemporary, low-profile design with 3 sizes and 2 forms available. Built for 120V use. TRIAC dimming compatibility and 90 CRI.

**Wattage Equivalency:**
40W Incandescent

**Input Wattage:**
10W

**Lumens (Nominal):**
820lm

**Efficacy:**
82lm/W

**L70 Lifespan:**
50,000-Hour LED lifespan based on IES LM-70 results

### Electrical

**Driver:**
Constant Current @ 120V, 60Hz: 93 mA

**Power Factor:**
≥0.9

**Dimmable:**
Yes, dimmable down to 10% on compatible TRIAC/ELV dimming systems. See Dimmer Compatibility List.

**Input Voltage:**
120V

**Operating Frequency:**
60 Hz

**Input Current @ 120V (mA):**
93mA

### Construction

**Operating Temperature Range:**
-4°F - 104°F (-20°C - 40°C)

**Size:**
5.5"

**Shape:**
Round

**Finish:**
Matte Black, fade & Scratch resistant Color trim overlays available, sold separately

**Enclosure Material:**
Steel heatsink with robust thermal performance Polyester UV resistant Polyester trim ring

**Trim Style:**
Smooth

**Lens Finish:**
Frosted

**Lens:**
Acrylic lightguide diffuses light evenly & smoothly without hotspots

### LED Characteristics

**Color Accuracy (CRI):**
90 CRI

**R9 Value:**
High color performance with R9 greater than 50

**Color Consistency:**
<4-step MacAdam Ellipse binning to achieve consistent fixture-to-fixture color

**Color Stability:**
LED color temperature is warrantied to Shift no more than 200K in color temperature over a 5-year period


Copyright © 2026 RAB Lighting All Rights Reserved Note: Specifications are subject to change at any time without notice

## Technical Specifications (continued)

**Color Uniformity:**
RAB's range of Correlated Color Temperature follows the guidelines of the American National Standard for Specifications for the Chromaticity of Solid State Lighting (SSL) Products, ANSI C78.377-2017.

### Installation

**Mounting:**
Driver on board design allows for extremely thin fixture design without a driver on back, making it simple to install on most common junction boxes. Accessory available to mount fixture to existing recessed housings, sold separately.

### Compliance

**Listings:**
UL Listed

**Environment:**
Suitable for use indoors and outdoors in dry, damp, or wet environments.

**IC Rated:**
No

**Air Tight:**
No

**Energy Star Approved:**
This product is ENERGY STAR® Version 2.2 Certified.

**Certification Model Number:**
DLS0196(SUMO-R-5K)

**California Title 20 Compliant:**
No

**California Title 24 JA8 Compliant:**
Can be used to conform with the requirements of California Title 24 Part 6.

**California Energy Commission (CEC) Status:**
Lawful for Sales in California

**NEC Compliant:**
Suitable for use in closets. Compliant with NEC Sec. 410.16 (A)(1) and 410.16 (C3).

**IESNA LM-79 & LM-80 Testing:**
RAB LED luminaires and LED components have been tested by an independent laboratory in accordance with IESNA LM-79 and LM-80.

**RoHS:**
Mercury and UV free. RoHS-compliant components.

**FCC:**
Complies with Part 15 of the FCC Rules

### Other

**Compatible Accessories:**
EMB-R-5
5.5" SUMO battery backup

EMB-R-5/EC
5.5" SUMO empty case

**5-Year, No-Compromise Warranty:**
RAB warrants that our LED products will be free from defects in materials and workmanship for a period of five (5) years from the date of delivery to the end user, including coverage of light output, color stability, driver performance and fixture finish. RAB's warranty is subject to all terms and conditions found at rablighting.com/warranty.


Copyright © 2026 RAB Lighting All Rights Reserved Note: Specifications are subject to change at any time without notice

# SUMO-R-5K

## Dimensions

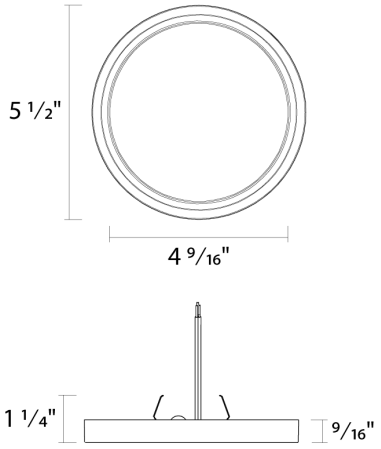


## Features

- Super Slim design with less than 1" fixture profile
- 5 color temperatures in 1 SKU (2700/3000/3500/4000/5000K)
- Suitable for wet and damp locations
- Wet and damp location rated can be used indoors or outdoors
- Easy to install on a wide variety of junction boxes
- Color trim accessories available
- 50,000-hr lifespan, Dimmable, & Title 24 compliant

## Ordering Matrix

| Family | Shape | Size/Wattage | CRI/Color Temp | Driver | Finish | Options |
|---|---|---|---|---|---|---|
| SUMO | R | 5 | | | K | |
| | **R =** Round<br>**S =** Square | **15 =** 15", (28W)<br>**12 =** 12", (22W)<br>**9 =** 9", (18W)<br>**7 =** 7", (14W)<br>**5 =** 5.5", (10W) | **Blank =** 90 CRI, 2700/3000/3500/4000/5000K CCT Adjustable | **Blank =** 120V, TRIAC/ELV | **Blank =** White<br>**K =** Black | **Blank =** Standard<br>**/BP =** Bulk Pack |


Copyright © 2026 RAB Lighting All Rights Reserved Note: Specifications are subject to change at any time without notice