SUMO-R-15K

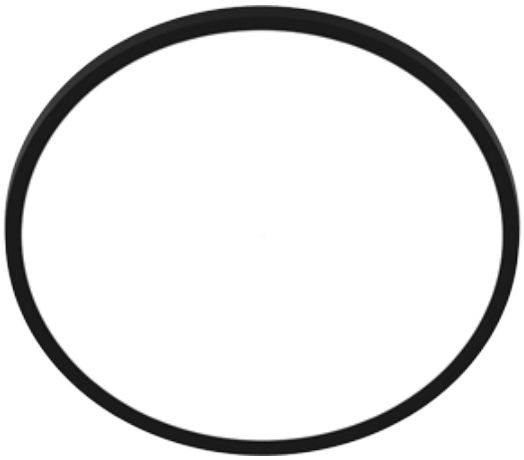

Color: Black

Weight: 2.6 lbs

Project:	**Type:**
Prepared By:	**Date:**

Driver Info

Type	Constant Current
120V	0.26A
208V	N/A
240V	N/A
277V	N/A
Input Watts	28W

LED Info

Watts	28W
Color Temp	2700/3000/3500/4000/5000K
Color Accuracy	90 CRI
L70 Lifespan	50,000 Hours
Lumens	1,950-2,200 lm
Efficacy	75-85 lm/W

Technical Specifications

Performance

Product Type:
Slim Style Edge-Lit Surface mount downlight

Description:
5 selectable color temperatures in one surface mount fixture. Contemporary, low-profile design with 3 sizes and 2 forms available. Built for 120V use. TRIAC dimming compatibility and 90 CRI.

Wattage Equivalency:
150W Incandescent

Input Wattage:
28W

Lumens:
2,000lm

Efficacy:
70lm/W

L70 Lifespan:
50,000-Hour LED lifespan based on IES LM-70 results

Electrical

Driver:
Constant Current @ 120V, 60Hz: 260 mA

Power Factor:
≥0.9

Dimmable:
Yes, dimmable down to 10% on compatible TRIAC/ELV dimming systems. See Dimmer Compatibility List.

Input Voltage:
120V

Operating Frequency:
60 Hz

Input Current @ 120V (mA):
260mA

Construction

Operating Temperature Range:
-4°F - 104°F (-20°C - 40°C)

Size:
15"

Shape:
Round

Finish:
Matte Black, fade & Scratch resistant Color trim overlays available, sold separately

Enclosure Material:
Steel heatsink with robust thermal performance Polyester UV resistant Polyester trim ring

Trim Style:
Smooth

Lens Finish:
Frosted

Lens:
Acrylic lightguide diffuses light evenly & smoothly without hotspots

LED Characteristics

Color Accuracy (CRI):
90 CRI

R9 Value:
High color performance with R9 greater than 50

Color Consistency:
<4-step MacAdam Ellipse binning to achieve consistent fixture-to-fixture color

Color Stability:
LED color temperature is warrantied to Shift no more than 200K in color temperature over a 5-year period

Copyright © 2026 RAB Lighting All Rights Reserved Note: Specifications are subject to change at any time without notice

Technical Specifications (continued)

Color Uniformity:
RAB's range of Correlated Color Temperature follows the guidelines of the American National Standard for Specifications for the Chromaticity of Solid State Lighting (SSL) Products, ANSI C78.377-2017.

Installation

Mounting:
Driver on board design allows for extremely thin fixture design without a driver on back, making it simple to install on most common junction boxes. Accessory available to mount fixture to existing recessed housings, sold separately.

Compliance

Listings:
UL Listed

Environment:
Suitable for use indoors and outdoors in dry, damp, or wet environments.

IC Rated:
No

Air Tight:
No

Certification Model Number:
DLS0201(SUMO-R-15K)

California Title 20 Compliant:
No

California Title 24 JA8 Compliant:
Can be used to conform with the requirements of California Title 24 Part 6.

California Energy Commission (CEC) Status:
Lawful for Sales in California

NEC Compliant:
Suitable for use in closets. Compliant with NEC Sec. 410.16 (A)(1) and 410.16 (C3).

IESNA LM-79 & LM-80 Testing:
RAB LED luminaires and LED components have been tested by an independent laboratory in accordance with IESNA LM-79 and LM-80.

RoHS:
Mercury and UV free. RoHS-compliant components.

FCC:
Complies with Part 15 of the FCC Rules

Other

5-Year, No-Compromise Warranty:
RAB warrants that our LED products will be free from defects in materials and workmanship for a period of five (5) years from the date of delivery to the end user, including coverage of light output, color stability, driver performance and fixture finish. RAB's warranty is subject to all terms and conditions found at rablighting.com/warranty.

Copyright © 2026 RAB Lighting All Rights Reserved Note: Specifications are subject to change at any time without notice

SUMO-R-15K

Dimensions

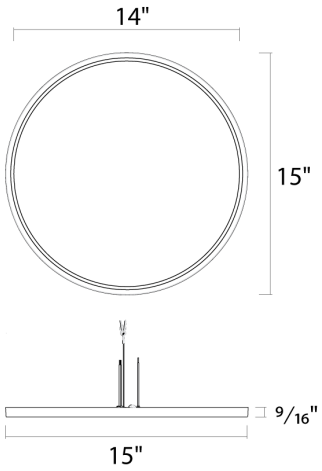

Features

- Super Slim design with less than 1" fixture profile
- 5 color temperatures in 1 SKU (2700/3000/3500/4000/5000K)
- Suitable for wet and damp locations
- Wet and damp location rated can be used indoors or outdoors
- Easy to install on a wide variety of junction boxes
- Color trim accessories available
- 50,000-hr lifespan, Dimmable, & Title 24 compliant

Ordering Matrix

Family	Shape	Size/Wattage	CRI/Color Temp	Driver	Finish	Options
SUMO	R	15			K	
	R = Round **S =** Square	**15 =** 15", (28W) **12 =** 12", (22W) **9 =** 9", (18W) **7 =** 7", (14W) **5 =** 5.5", (10W)	**Blank =** 90 CRI, 2700/3000/3500/4000/5000K CCT Adjustable	**Blank =** 120V, TRIAC/ELV	**Blank =** White **K =** Black	**Blank =** Standard **/BP =** Bulk Pack

Copyright © 2026 RAB Lighting All Rights Reserved Note: Specifications are subject to change at any time without notice