PRT110RW/LCB/E

RAB

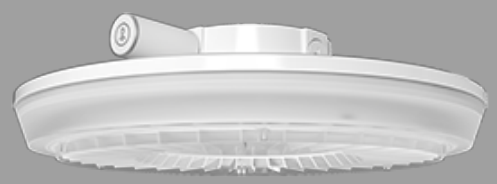

Color: White

Weight: 0.0 lbs

Project:	Type:
Prepared By:	Date:

Driver Info

Type	Constant Current
120V	0.96A/0.80A/0.67A
208V	0.56A/0.46A/0.38A
240V	0.48A/0.40A/0.34A
277V	0.42A/0.35A/0.29A
Input Watts	74.7-106.1W

LED Info

Watts	110/95/80W
Color Temp	3500/4000/5000K
Color Accuracy	80-82 CRI
L70 Lifespan	100,000 Hours
Lumens	10,249-14,125 lm
Efficacy	126.2-143.3 lm/W

Technical Specifications

Field Adjustability

Field Adjustable:
Field Adjustable Light Output:
110W/95W/80W (factory default 80W)
Color Temperature Selectable:
3500K, 4000K and 5000K (factory default 4000K)
On/Off Photocell (factory default "Off")

Compliance

UL Listed:
Suitable for wet locations

IP Rating:
Ingress protection rating of IP65 for dust and water

IESNA LM-79 & LM-80 Testing:
RAB LED luminaires and LED components have been tested by an independent laboratory in accordance with IESNA LM-79 and LM-80.

DLC Listed:
This product is listed by Design Lights Consortium (DLC) as an ultra-efficient premium product that qualifies for the highest tier of rebates from DLC Member Utilities. Designed to meet DLC 5.1 requirements.
DLC Product Code: S-31DVSZ

Performance

Lifespan:
100,000-Hour LED lifespan based on IES LM-80 results and TM-21 calculations

Driver:
110W: Constant Current, Class 1, 50/60 Hz, 120V-277V, 120V: 0.96A, 208V: 0.56A; 240V: 0.48A, 277V: 0.42A
95W: Constant Current, Class 1, 50/60 Hz, 120V-277V, 120V: 0.80A, 208V: 0.46A; 240V: 0.40A, 277V: 0.35A
80W: Constant Current, Class 1, 50/60 Hz, 120V-277V, 120V: 0.67A, 208V: 0.38A; 240V: 0.34A, 277V: 0.29A

LED Characteristics

LEDs:
Long-life, high-efficacy, surface-mount LEDs

Color Consistency:
7-step MacAdam Ellipse binning to achieve consistent fixture-to-fixture color

Color Uniformity:
RAB's range of Correlated Color Temperature follows the guidelines of the American National Standard for Specifications for the Chromaticity of Solid State Lighting (SSL) Products, ANSI C78.377-2017.

Electrical

Dimming Driver:
Driver includes dimming control wiring for 0-10V dimming systems. Requires separate 0-10V DC dimming circuit. Dims down to 10%.

THD:
110W: 4.77% at 120V, 8.67% at 277V
95W: 5.84% at 120V, 10.54% at 277V
80W: 6.8% at 120V, 11.32% at 277V

Power Factor:
110W: 99.8% at 120V, 96.5% at 277V
95W: 99.7% at 120V, 95.2% at 277V
80W: 99.5% at 120V, 93.7% at 277V

Battery Backup:
Battery backup will operate the fixture for 90 minutes if power fails. Wired for 120-277V.

Battery Backup Light Loss Factor:
110W: 15%
95W: 17%
80W: 20%

Surge Protection:
Ringwave LN4kV/LN-GND 6kV

Aux Power Supply:
Yes

Copyright © 2025 RAB Lighting All Rights Reserved Note: Specifications are subject to change at any time without notice

Technical Specifications (continued)

Dim to Off:
Yes

Photocell:
Integrated photocell included with on/off switch (factory default: off)

Construction

Cold Weather Starting:
The minimum starting temperature is 0°C (32°F)

Maximum Ambient Temperature:
Suitable for use in up to 40°C (104°F)

Gaskets:
High-temperature silicone

Housing:
Die-cast aluminum

Lens:
Polycarbonate lens

Reflector:
Polycarbonate

Green Technology:
Mercury and UV free. RoHS-compliant components.

Finish:
Formulated for high durability and long-lasting color

Installation

Mounting:
Surface and pendant mounting

Optical

BUG Rating:
110W: B4 U5 G5
95W: B4 U4 G5
80W: B3 U4 G5

Lightcloud

Lightcloud Blue:
Lightcloud Blue is a Bluetooth Mesh wireless lighting control system that allows you to control RAB's various compatible devices. With RAB's patented Rapid Provisioning technology, devices can be quickly and easily commissioned for residential and large commercial applications using the Lightcloud Blue mobile app. Each device in a system can communicate with any other device, eliminating the need for a Gateway or Hub and maximizing the control system's reach.

DLC system - N1XMLOEATBA (Interior); NHCZ2BIA17L (Exterior)

Learn more at www.lightcloud.com.

Gateway Required:
No

Communication Protocol:
Bluetooth Mesh

Range:
Indoor: Up to 60 feet between standard building materials. Building materials such as brick, concrete, and steel construction may require additional Lightcloud Blue devices to extend around an obstruction; Up to 200 feet clear line of sight.

Outdoor: Up to 60 feet clear line of sight; Up to 18 feet around corners

Spacing Criteria:
Lightcloud Blue devices should be placed within the specified range to communicate within the Bluetooth Mesh network.

Factory Reset:
Method 1: Delete from App
Open the app and access the device settings for the paired device. Be sure that the device is online and select 'Delete'. The device will flash on/off 5 times and return to full brightness.
Method 2: Manual
Press and hold down the button located at the top of the Controller for 10 seconds or until the light flashes on/off 3 times. The status indicator light will flash red to confirm it has been reset and is ready to pair to the App.

Status Indicator:
The status indicator light is located around the circumference of the top of the Controller.

Solid Green: connected to a Lightcloud Blue network.
Blinking Red: unprovisioned, ready to pair

Device Identification Button:
Located at the top of the controller under the Lightcloud logo.
Once the Controller has been provisioned to the Lightcloud Blue mobile app this button offers the following functionality:
Press once to rapid identify this device in the Lightcloud Blue mobile app
Press twice to toggle circuit on and off
Press twice and hold to set dim level
Press and hold for 10s to reset the device to factory settings and into pairing mode

Other

5 Yr Limited Warranty:
The RAB 5-year, limited warranty covers light output, driver performance and paint finish. RAB's warranty is subject to all terms and conditions found at rablighting.com/warranty.

Buy American Act Compliance:
RAB values USA manufacturing! Upon request, RAB may be able to manufacture this product to be compliant with the Buy American Act (BAA). Please contact customer service to request a quote for the product to be made BAA compliant.

Copyright © 2025 RAB Lighting All Rights Reserved Note: Specifications are subject to change at any time without notice

Dimensions

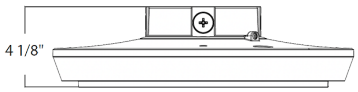

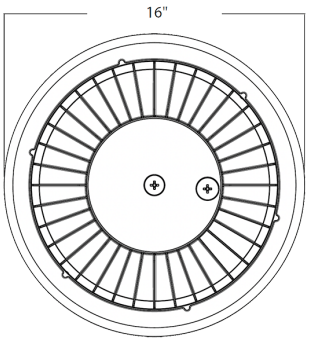

Features

- IP65 rated
- 100,000-Hour LED lifespan
- 5-Year Limited Warranty

Ordering Matrix

Family	Wattage	Color Temp	Shape	Finish	Driver	Options
PRT	110		R	W		/LCB/E
	55 = 55/42/30W **80 =** 80/70/60W **110 =** 110/95/80W	**Blank =** 3500/4000/5000K Adjustable CCT	**R =** Round **S =** Square	**Blank =** Bronze **W =** White	**Blank =** 120-277V, 0-10V Dimming, On/Off Photocell **/480 =** 480V, 0-10V Dimming, On/Off Photocell	**Blank =** On/Off Photocell [1] **/E =** Battery Backup & On/Off Photocell [2] **/LC =** Lightcloud **/LCB =** Lightcloud Blue **/LC/E =** Lightcloud w/Battery Backup [2] **/LCB/E =** Lightcloud Blue w/ Battery Backup [2]

[1] *Integrated photocell can't be used when ordered with LC or LCB options*
[2] *Battery backup only available on 120-277V models*

Copyright © 2025 RAB Lighting All Rights Reserved Note: Specifications are subject to change at any time without notice