PRT110RW/E

RAB

Color: White

Weight: 8.4 lbs

Project:	Type:
Prepared By:	Date:

Driver Info

Type	Constant Current
120V	0.96A/0.80A/0.67A
208V	0.56A/0.46A/0.38A
240V	0.48A/0.40A/0.34A
277V	0.42A/0.35A/0.29A
Input Watts	74.7-106.1W

LED Info

Watts	110/95/80W
Color Temp	3500/4000/5000K
Color Accuracy	80-82 CRI
L70 Lifespan	100,000 Hours
Lumens	10,249-14,125 lm
Efficacy	126.2-143.3 lm/W

Technical Specifications

Field Adjustability

Field Adjustable:
Field Adjustable Light Output:
110W/95W/80W (factory default 80W)
Color Temperature Selectable:
3500K, 4000K and 5000K (factory default 4000K)
On/Off Photocell (factory default "Off")

Compliance

UL Listed:
Suitable for wet locations

IP Rating:
Ingress protection rating of IP65 for dust and water

IESNA LM-79 & LM-80 Testing:
RAB LED luminaires and LED components have been tested by an independent laboratory in accordance with IESNA LM-79 and LM-80.

DLC Listed:
This product is listed by Design Lights Consortium (DLC) as an ultra-efficient premium product that qualifies for the highest tier of rebates from DLC Member Utilities. Designed to meet DLC 5.1 requirements.
DLC Product Code: S-31DVSZ

Performance

Lifespan:
100,000-Hour LED lifespan based on IES LM-80 results and TM-21 calculations

Driver:
110W: Constant Current, Class 1, 50/60 Hz, 120V-277V, 120V: 0.96A, 208V: 0.56A; 240V: 0.48A, 277V: 0.42A
95W: Constant Current, Class 1, 50/60 Hz, 120V-277V, 120V: 0.80A, 208V: 0.46A; 240V: 0.40A, 277V: 0.35A
80W: Constant Current, Class 1, 50/60 Hz, 120V-277V, 120V: 0.67A, 208V: 0.38A; 240V: 0.34A, 277V: 0.29A

LED Characteristics

LEDs:
Long-life, high-efficacy, surface-mount LEDs

Color Consistency:
7-step MacAdam Ellipse binning to achieve consistent fixture-to-fixture color

Color Uniformity:
RAB's range of Correlated Color Temperature follows the guidelines of the American National Standard for Specifications for the Chromaticity of Solid State Lighting (SSL) Products, ANSI C78.377-2017.

Electrical

Dimming Driver:
Driver includes dimming control wiring for 0-10V dimming systems. Requires separate 0-10V DC dimming circuit. Dims down to 10%.

THD:
110W: 4.77% at 120V, 8.67% at 277V
95W: 5.84% at 120V, 10.54% at 277V
80W: 6.8% at 120V, 11.32% at 277V

Power Factor:
110W: 99.8% at 120V, 96.5% at 277V
95W: 99.7% at 120V, 95.2% at 277V
80W: 99.5% at 120V, 93.7% at 277V

Battery Backup:
Battery backup will operate the fixture for 90 minutes if power fails. Wired for 120-277V.

Battery Backup Light Loss Factor:
110W: 15%
95W: 17%
80W: 20%

Surge Protection:
Ringwave LN4kV/LN-GND 6kV

Aux Power Supply:
Yes

Copyright © 2025 RAB Lighting All Rights Reserved Note: Specifications are subject to change at any time without notice

Technical Specifications (continued)

Dim to Off:
Yes

Photocell:
Integrated photocell included with on/off switch (factory default: off)

Construction

Cold Weather Starting:
The minimum starting temperature is 0°C (32°F)

Maximum Ambient Temperature:
Suitable for use in up to 40°C (104°F)

Gaskets:
High-temperature silicone

Housing:
Die-cast aluminum

Lens:
Polycarbonate lens

Reflector:
Polycarbonate

Green Technology:
Mercury and UV free. RoHS-compliant components.

Finish:
Formulated for high durability and long-lasting color

Installation

Mounting:
Surface and pendant mounting

Optical

BUG Rating:
110W: B4 U5 G5
95W: B4 U4 G5
80W: B3 U4 G5

Other

5 Yr Limited Warranty:
The RAB 5-year, limited warranty covers light output, driver performance and paint finish. RAB's warranty is subject to all terms and conditions found at rablighting.com/warranty.

Buy American Act Compliance:
RAB values USA manufacturing! Upon request, RAB may be able to manufacture this product to be compliant with the Buy American Act (BAA). Please contact customer service to request a quote for the product to be made BAA compliant.

Copyright © 2025 RAB Lighting All Rights Reserved Note: Specifications are subject to change at any time without notice

PRT110RW/E

RAB

Dimensions

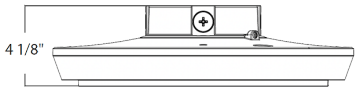

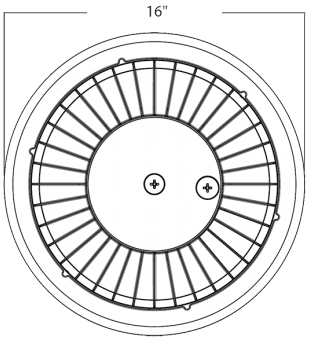

Features

- IP65 rated
- 100,000-Hour LED lifespan
- 5-Year Limited Warranty

Ordering Matrix

Family	Wattage	Color Temp	Shape	Finish	Driver	Options
PRT	110		R	W		/E
	55 = 55/42/30W **80 =** 80/70/60W **110 =** 110/95/80W	**Blank =** 3500/4000/5000K Adjustable CCT	**R =** Round **S =** Square	**Blank =** Bronze **W =** White	**Blank =** 120-277V, 0-10V Dimming, On/Off Photocell **/480 =** 480V, 0-10V Dimming, On/Off Photocell	**Blank =** On/Off Photocell [1] **/E =** Battery Backup & On/Off Photocell [2] **/LC =** Lightcloud **/LCB =** Lightcloud Blue **/LC/E =** Lightcloud w/Battery Backup [2] **/LCB/E =** Lightcloud Blue w/ Battery Backup [2]

[1] *Integrated photocell can't be used when ordered with LC or LCB options*
[2] *Battery backup only available on 120-277V models*

Copyright © 2025 RAB Lighting All Rights Reserved Note: Specifications are subject to change at any time without notice