ALB JOIN KIT

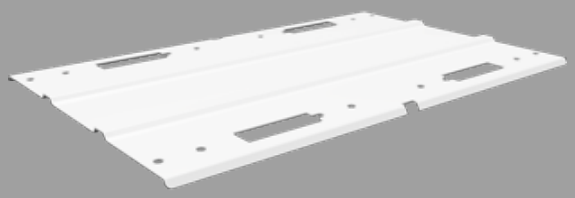

Color: White

Weight: 1.1 lbs

Project:	**Type:**
Prepared By:	**Date:**

Driver Info

Type	Constant
120V	N/A
208V	N/A
240V	N/A
277V	N/A
Input Watts	N/A

LED Info

Watts	N/A
Color Temp	N/A
Color Accuracy	N/A
L70 Lifespan	N/A
Lumens	N/A
Efficacy	N/A

Technical Specifications

Performance

Description:
Joint kit with nuts

Other

Compatible Products:
ALBERT Field-Adjustable Wrap

Construction

Finish:
Formulated for high durability and long-lasting color

Copyright © 2026 RAB Lighting All Rights Reserved Note: Specifications are subject to change at any time without notice

ALB JOIN KIT

Dimensions

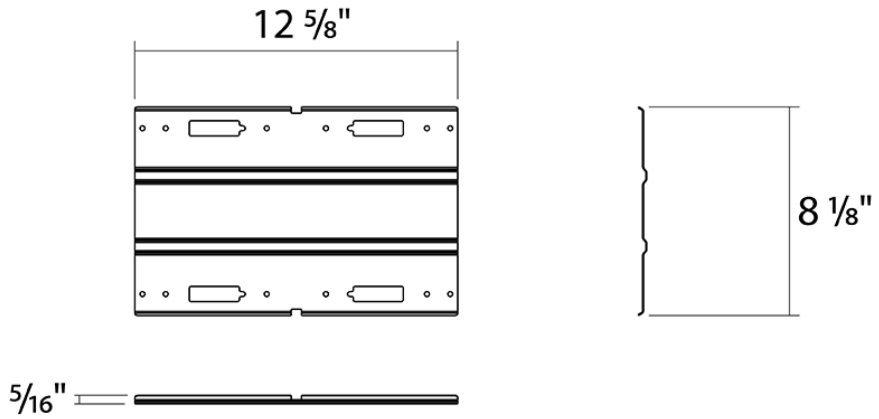

Copyright © 2026 RAB Lighting All Rights Reserved Note: Specifications are subject to change at any time without notice